MITSUBISHI

Mitsubishi Industrial Robot (Products & Technologies) Information Newsletter

MELFA news

Vol. 3

●MELFA News Volume 3 Release

Volume 3 of MELFA News covers the overseas specifications, which are mostly written in English. Promoted by the trend toward business globalization, MELFA robots are increasingly used overseas. Especially due to the rapid growth in investment in overseas plants and equipment for liquid crystals and semiconductors, indirect exports of MELFA robots are increasing, especially to Asian countries. For sales within Japan, the Japanese specifications are applied as the standard. However, for robots whose end users are overseas, the overseas specifications are required. This issue explains the differences between the Japanese and overseas specifications, as well as how we cope with overseas-specification products within Japan.

Special Report

Q:What are the differences between the Japanese and overseas specifications?
How do you handle the specifications for indirect export?

Differences between the Japanese and overseas specifications of MELFA robots

(CR1/CR2 compatible models)

[Basic items]

The differences between the Japanese and overseas specifications are classified as follows:

Japanese specifications	A	Specifications written in Japanese	For use in Japan
Overseas specifications	B	Non-CE marking specifications	For use other than in Europe
	C	CE marking specifications	For use in CE member countries in Europe

●The overseas specifications are used when Mitsubishi directly ships its robots to overseas sales offices.
●The overseas specifications that are handled in Japan are classified as special specifications.

RV-2AJ robot arm

CR1-571 controller

[Major changes] * The following specifications may vary slightly, depending on the model.
* For models other than those listed in the table below, please inquire individually.

[1] The display labels are written in English. (Additionally, German labels are available for the CE marking specifications.)
[2] The instruction manual is written in English.
[3] The main unit's software ROM inside the controller supports the English-language display.
Note 1) The display of the teaching pendant is in Kana characters for Japanese specifications.
Note 2) The display of the teaching pendant is in English for overseas specifications.
[4] The I/O types are different: Sink is used for Japanese and non-CE marking specifications, while source is used for CE marking specifications.
[5] Packing is reinforced for export.
[6] The English version of PC support software is used.

Item			A. Japanese specifications	Overseas specifications	
				B. Non-CE (other than Europe)	C. CE (European CE member countries)
Display, caution and other labels			Japanese	English	English or German
Instruction manual			Japanese	English	English
I/O specification			Sink type	Sink type	Source type
Input power supply (by model)	RP-1/3/5AH	CR1-571	Single-phase 90 to 132 VAC and single-phase 180 to 253 VAC	Single-phase 90 to 132 VAC and single-phase 180 to 253 VAC	Single-phase 207 to 253 VAC (*2)
	RV-1A/2AJ (*1)	CR1-571			
	RV-4A/5AJ/3AL/4AJL	CR2-532	Three-phase 180 to 253 VAC	Three-phase 180 to 253 VAC	Single-phase 207 to 253 VAC (*2)
Option	Pneumatic hand set		Sink type	Sink type	Source type
	Solenoid valve set		Sink type	Sink type	Source type
	Pneumatic hand interface		Sink type	Sink type	Source type
	Parallel I/O unit		Sink type	Sink type	Source type
	PC support software (standard version/mini version)		Japanese	English	English

(*1) The power-supply setting when shipping the RV-1A/2AJ within Japan and to overseas non-CE compliant countries is 100 VAC. (The factory default setting for the RP-1/3/5AH is 200 VAC.)
(*2) Conforms to the Europe CE unified power-supply standard, single-phase 230 V ± 10%.

[Handling of overseas specifications in Japan]

●The overseas specifications for MELFA robots to be purchased in Japan, such as when they're set up in Japan and shipped to overseas plants (indirect export), will be handled as special specifications. For more details, please contact any of our sales offices listed on the back of this MELFA News edition. Also, please note the following:

1 The display, screen and instruction manual, etc., are displayed in English. Use extreme caution to ensure safety.
2 If an instruction manual written in Japanese is required, it is available for purchase.

[Power-supply environments of major countries (reference)] Note) This data is extracted partially, and may vary slightly by country and region.

Region	Country name	Frequency (Hz)	General-household supply voltage (V)		Commercial voltage (V)		Industrial voltage (V)		Voltage regulation
			Single phase	Three phases	Single phase	Three phases	Single phase	Three phases	
Asia	Japan	50/60	200/100		200/100	200	200/100	200	±10%
	South Korea	60	100		200/100	200	380/220	380	±6%
	Taiwan	60	220/110	380	380/220/110	380/220	380/220	380/220	±10%
	Singapore	50	400/230	400	400/230	400	400/230	400	±3%
North America	United States (New York)	60	240/208/120	208	240/208/120	208	480/277	480	
	Canada	60	240/120		240/208/120	208	480/240	480/240	±4/-8.3%
Europe	CE unified standard	50	Single phase 400/230, Three phases 400						±10%

●One-Point Advice

There is a difference in the output common terminal between the sink and source types; they are GND and +24 V, respectively. In Europe (CE marking), the source type is required by the En60204-1/section 9.14 standard.

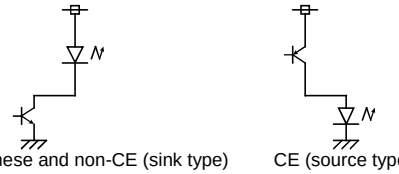

Japanese and non-CE (sink type) CE (source type)

MELFA Application Guide

FILE-2 Using <RP Series> robots to line up and/or transfer micro parts

●Overview

Processes that handle micro parts are increasing in recent years, especially for products relating to information technology and electronic equipment. Also, in order to improve the efficiency of work between various processes and to facilitate factory automation, in many instances these micro parts need to be lined up.

This example shows the application of an MELFA robot to a process that transfers the parts fed by a parts feeder or similar device to a palette, etc.

The RP Series robots offer high-speed transfer capability for micro parts, utilizing small hands to minimize the transfer-cell size for micro parts.

●Features/Capabilities

■Capable of high-speed transfer
- Capability: 0.7 to 1.2 sec./piece (average)

  Note) The transfer speed varies depending on the device placement and the control conditions of the peripheral devices.

■Compact
- Small installation area equivalent to a sheet of A4-size paper (for RP-3AH)
- The workspace requires only a width of 500 mm.

■Capable of controlling the peripheral devices using the multitask function
- Using a parallel I/O unit, the RP Series robots can control the pallet conveyer.
- The MELFA language is supported for writing the conveyer control program to enable concurrent processing. Since simple sequence processing can also be performed, the reduction in total manufacturing cost can be achieved, including the reduction in cell size.

■Simple change of grid patterns
- Programs can easily be created or changed using the palletized language.

■Lining up parts without a feeder
- With the use of a vision sensor, the RP Series robots can line up parts placed randomly without using a feeder.

●System Configuration

[1] Robot arm ..... RP-3AH (or RP-5AH)
[2] Robot controller CR1-571
[3] Hand (grip type, vacuum type, etc.)
[4] Parallel I/O unit 2A-RZ361
[5] Pallet conveyer
[6] Operation/display panel

●External View/image Diagram

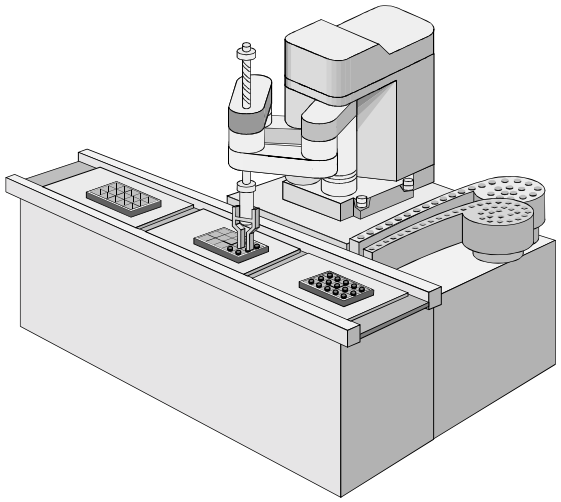

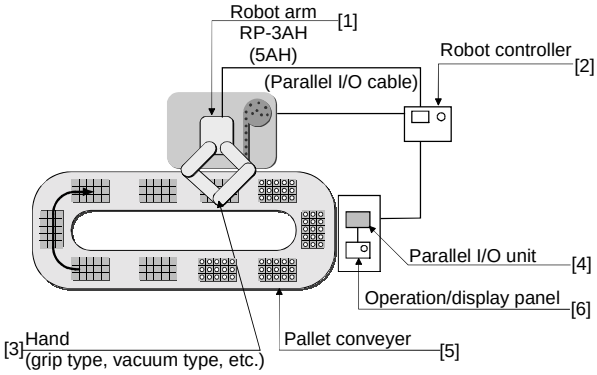

New Product Spotlight

Additional Axis Interface (optional)

Model name: 2A-RZ541

* This option is used exclusively for the CR1-571 controller.

●Overview

The additional axis interface is used to control servo-driven peripheral devices such as the traveling axis, turntable and transport unit. The control program can be written using the MELFA BASIC IV robot language. This product is the ideal way to increase the added value of the system.

●Features/Capabilities

■Capable of controlling up to eight axes

Note) Up to two axes can be synchronized with the robot.

■The program to control the operation can be written using the MELFA BASIC IV robot language.

■Jog operation and teaching operation can be performed via the teaching pendant.

■The additional axis interface is compatible with Mitsubishi's SSCNET using simple wiring.

A servo amplifier compatible with the MR-J2-B can be used.

●Specifications

Model name	2A-RZ541
Number of control axes	Max. 8 axes
Compatible amplifier	MR-J2-B (ABS)
Communication method	Mitsubishi's SSCNET (operation communication)
Emergency stop input	One point
Programming method	MELFA BASIC IV

Note) For details on the specifications, refer to the specifications of the model to be used.

●External View/Configuration Devices

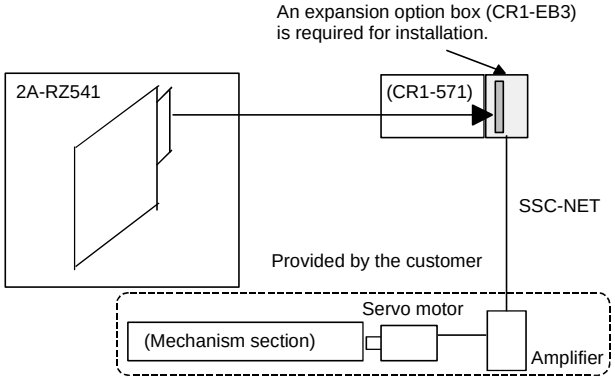

●Applicable models (as of July, 2000)

* The following models can be connected with the CR1-571.
- RP-1AH/3AH/5AH
- RV-1A/2AJ